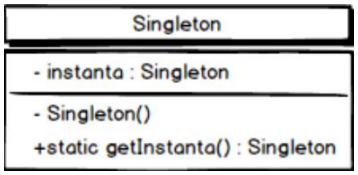

SINGLETON
Tip: Creational

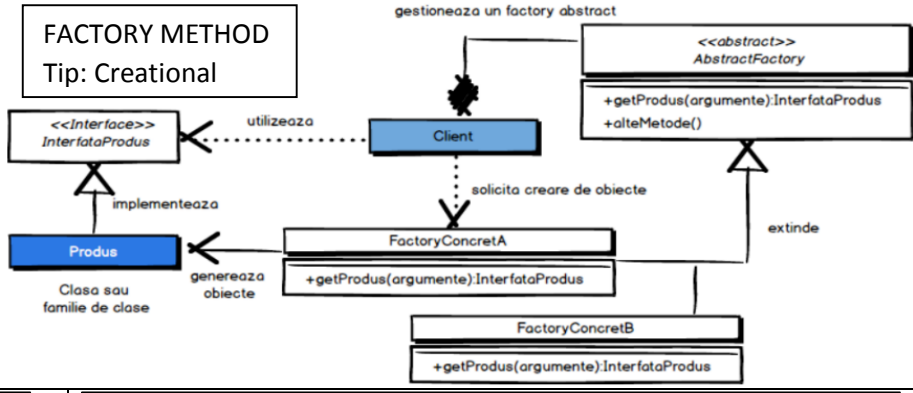

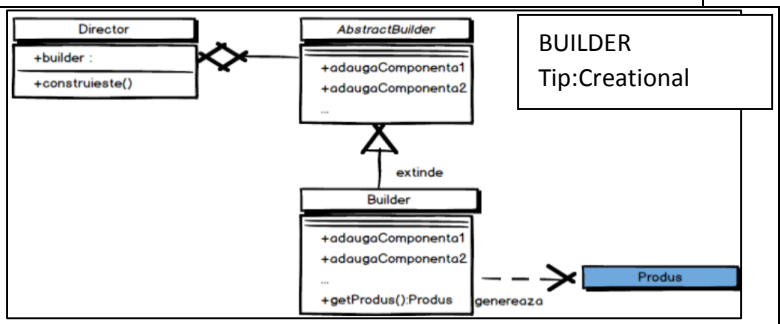

BUILDER
Tip:Creational

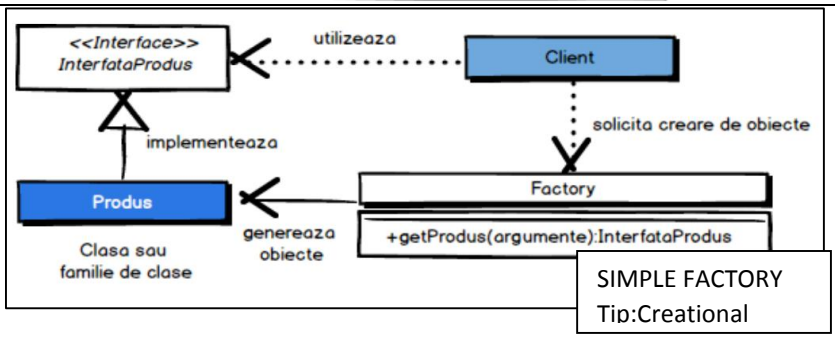

SIMPLE FACTORY
Tip:Creational

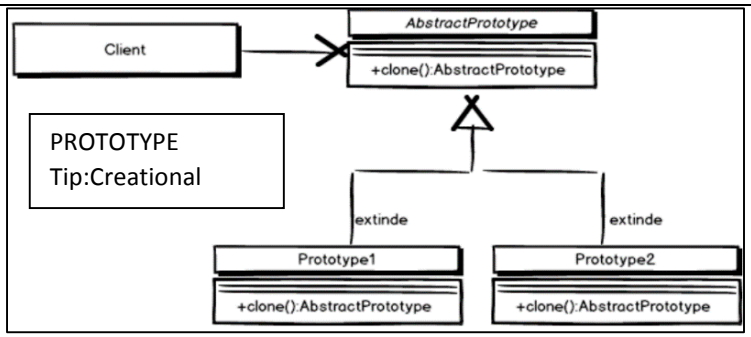

PROTOTYPE
Tip:Creational

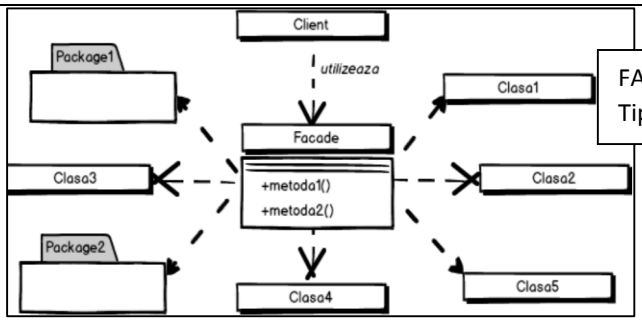

FACADE
Tip:Structurale

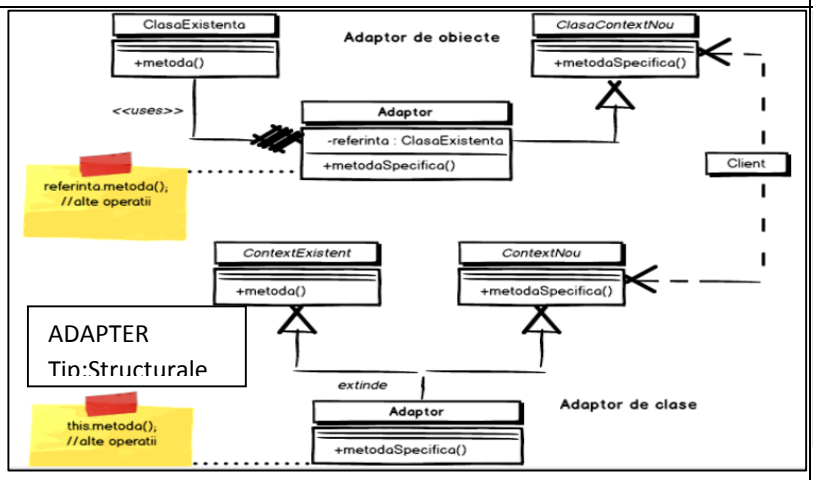

ADAPTER
Tip:Structurale

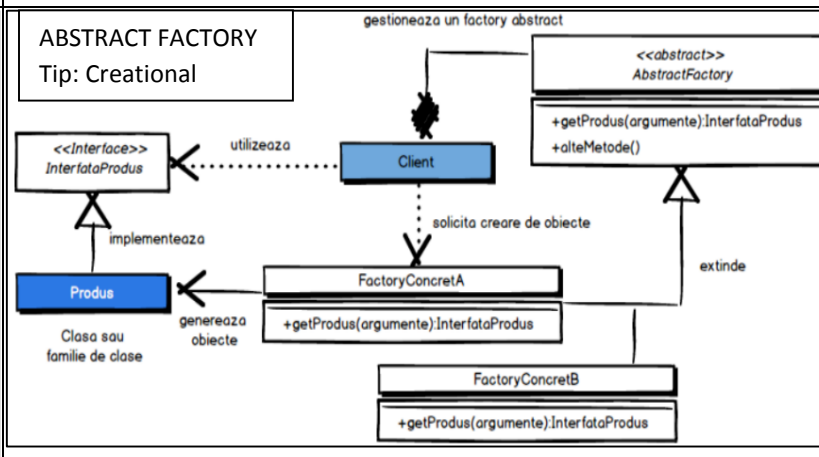

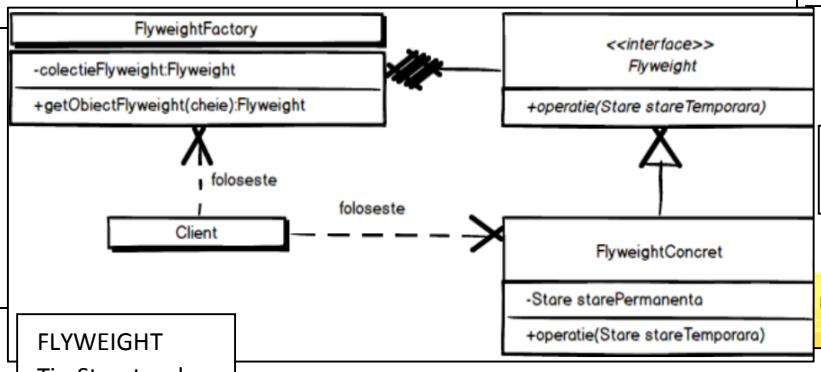

FLYWEIGHT
Tip:Structurale

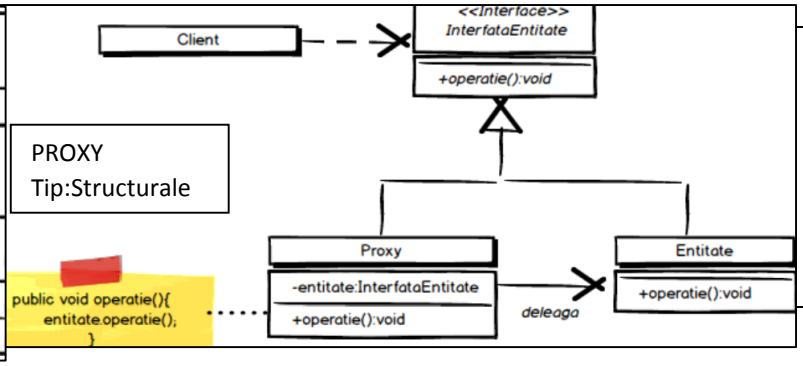

PROXY
Tip:Structurale

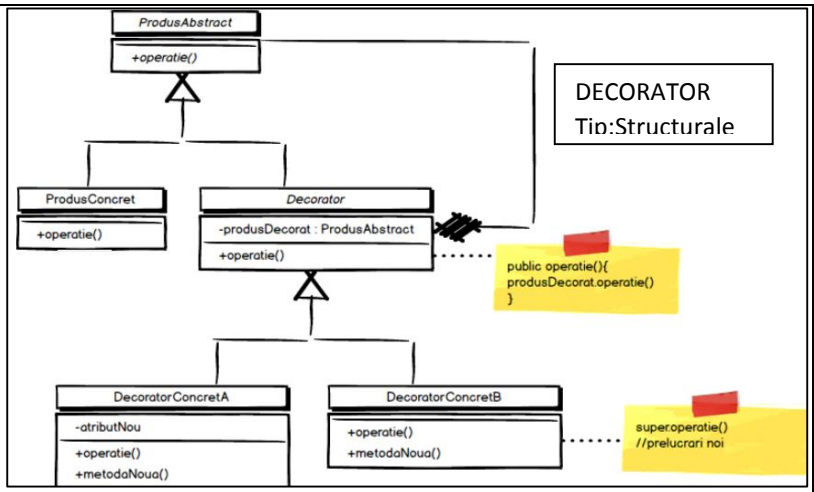

DECORATOR
Tip:Structurale

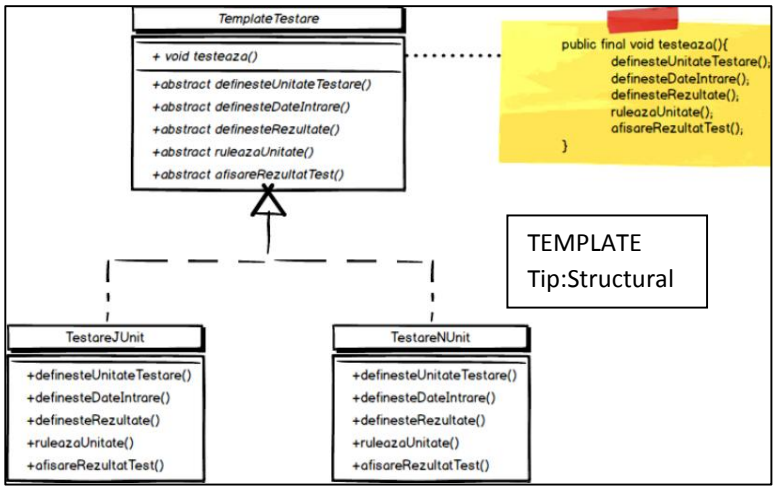

TEMPLATE
Tip:Structural

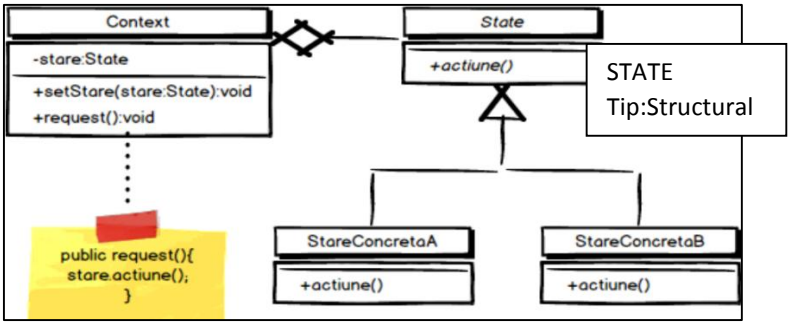

STATE
Tip:Structural

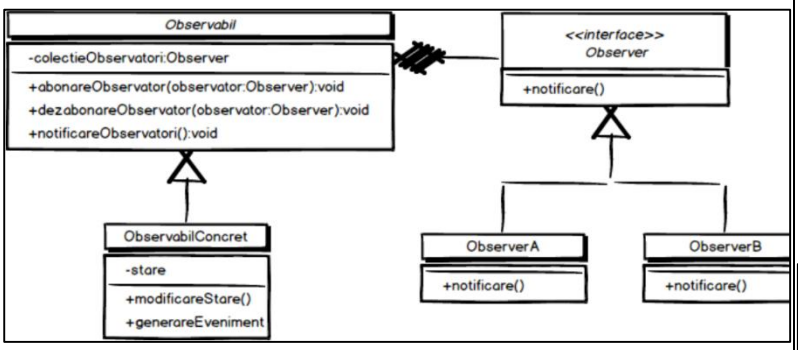

OBSERVER
Tip:Structurale

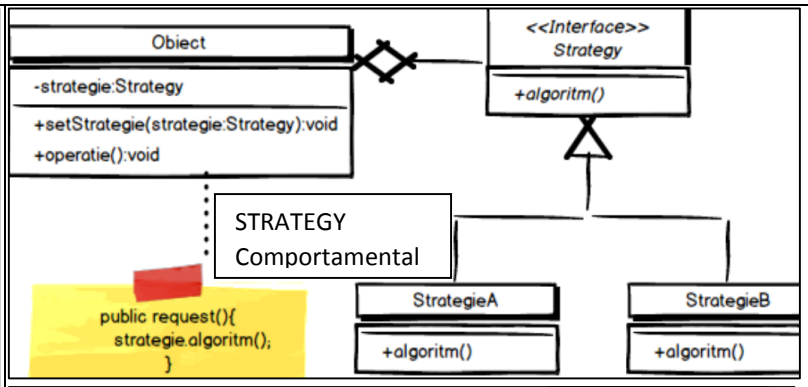

STRATEGY
Comportamental

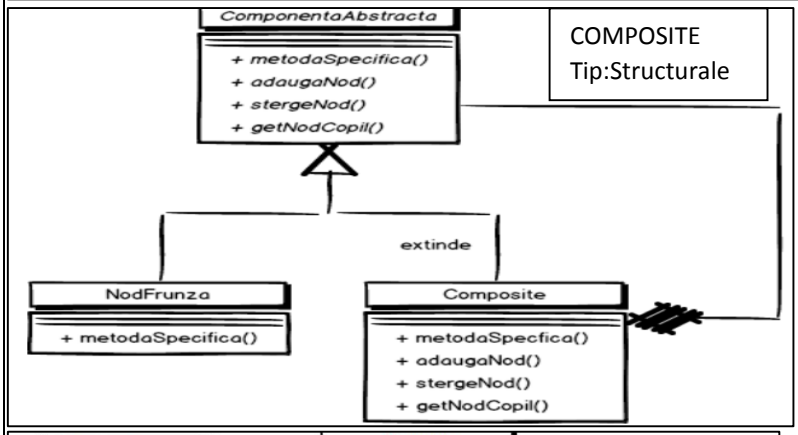

COMPOSITE
Tip:Structurale

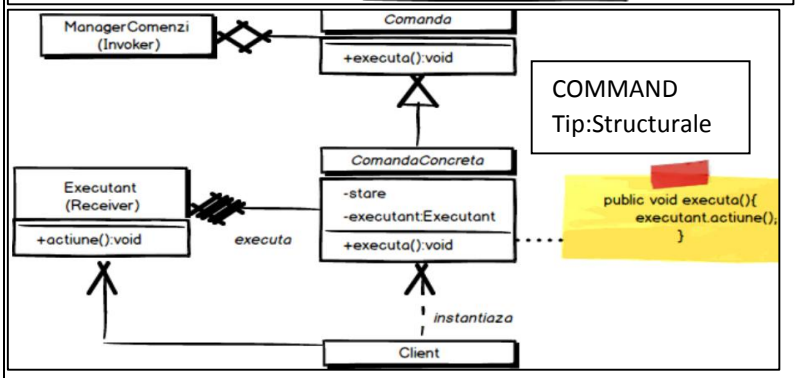

COMMAND
Tip:Structurale

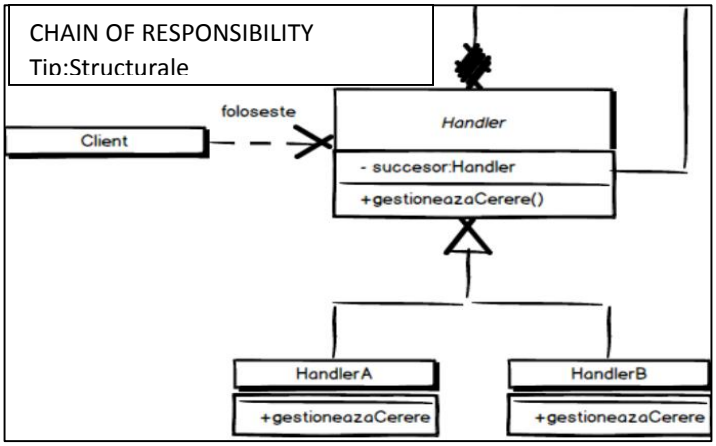

CHAIN OF RESPONSIBILITY
Tip:Structurale

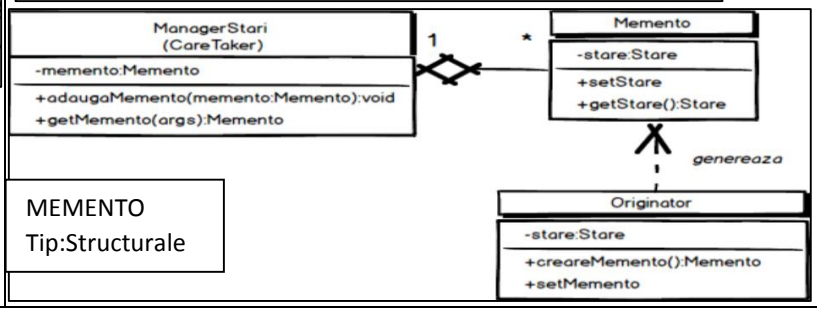

MEMENTO
Tip:Structurale